# FSCT, FSX, FST, FSCD
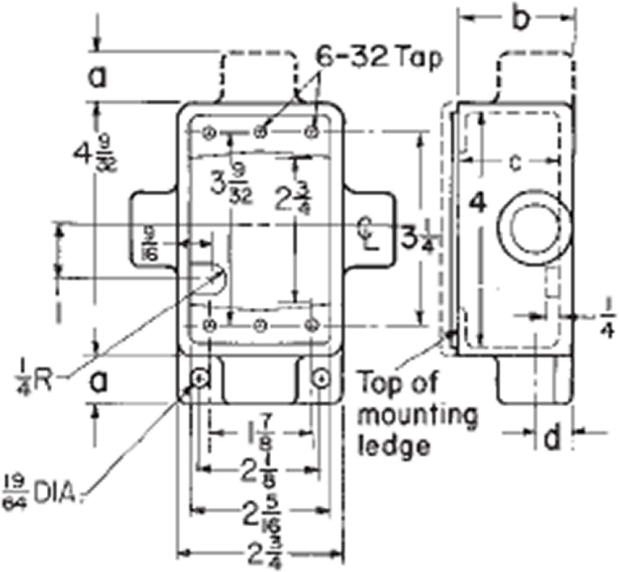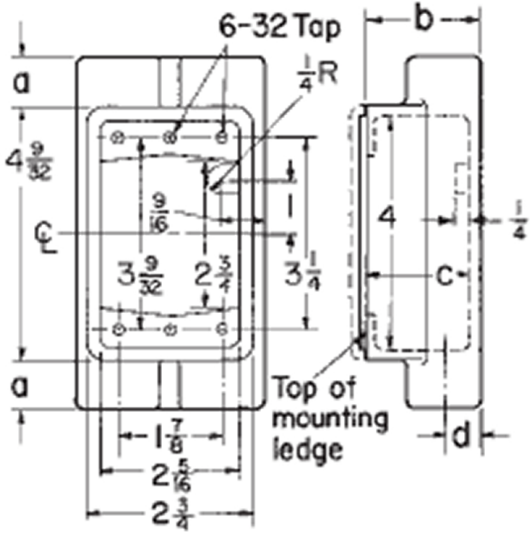
* Please see corresponding catalog page for dimensions key.